PARALLEL INTERFACE

Parallel output is the standard one for singleturn absolute encoders mainly because it provides the data output in a 'bit by bit' way so there is basically a pin for each bit. However, this type of output is more burdensome for multiturn encoders when the bit number becomes high. Simply, just consider that a single turn encoder can have a resolution up to 13 bit while a multiturn can reach up to 25 bit. Moreover, in these bit numbers additional signals as count inversion and data output block (LATCH) have not been taken in consideration. So, the high number of signal outputs is the main reason for been introduced alternative transmission protocol as Serial Synchronized Interface (SSI) or field buses (PROFIBUS, CANBUS, etc.).
Output data in Gray format:

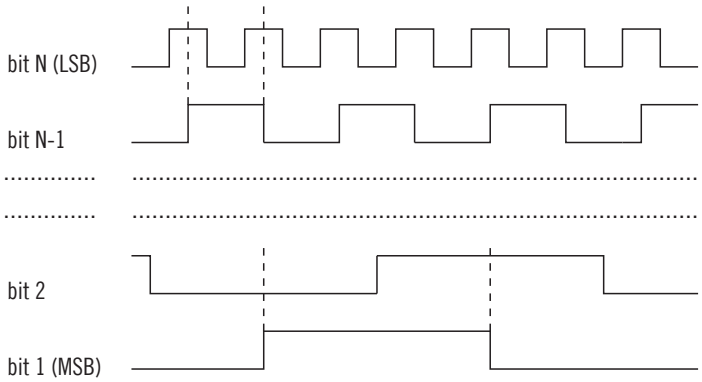

Output data can be available, depending on models, in both Gray and binary standard. In the latest encoder generation, the binary output is obtained by ASIC devices processing the Gray code signals coming from the photo-receiver circuit.
However, in the binary code the correct output data issue is still intrinsically present due to the multiple bit status transitions between contiguous positions. In order to avoid this problem, in the past an output sync signal (STROBE) was used while the adoption of programmable logic overcame this limitation.
Output data in binary format:

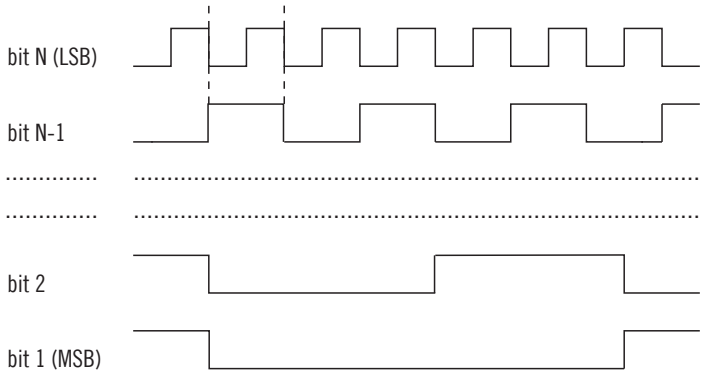

There are several output configurations to satisfy different electronic specifications requested from the controllers. Standard outpus are: NPN, NPN OPEN-COLLECTOR, PNP OPEN COLLECTOR, PUSH-PULL.

COMMAND INPUTS AND OPTIONAL OUTPUTS

As previously mentioned, external signals can control and command encoder output as reported below.

STANDARD SIGNAL

- U/D: the encoder will increase the counting while the shaft rotates clock-wise. It is equivalent to rotate the encoder shaft in the opposite direction.

OPTIONAL SIGNALS
(directly contact our offices for availability):

- LATCH: when connected, it maintains the current data as output. In this way, while the encoder shaft continues to turn, the output data doesn't change.
- RESET: it sets the zero position.
- STROBE: this signal is available only with binary code and indicates when it is possible to read the data. In fact, the logical status of the STROBE changes when the data is available (all bits have been updated).

INPUT	STATE HIGH	STATE LOW
U / D	Inverts the code	No effect
LATCH	Blocks the code	No effect
RESET	Output reset	No effect

© Copyright 2010 Eltra S.p.a. Unipersonale. All rights reserved. All informations in this catalog are subject to change without notice.
Eltra takes no responsibility for typographic errors. For the terms of sales please check the website www.eltra.it.